Fillon Technologies™

UK CA CE

DAISY WHEEL V3

NON-ATEX - EUROPE

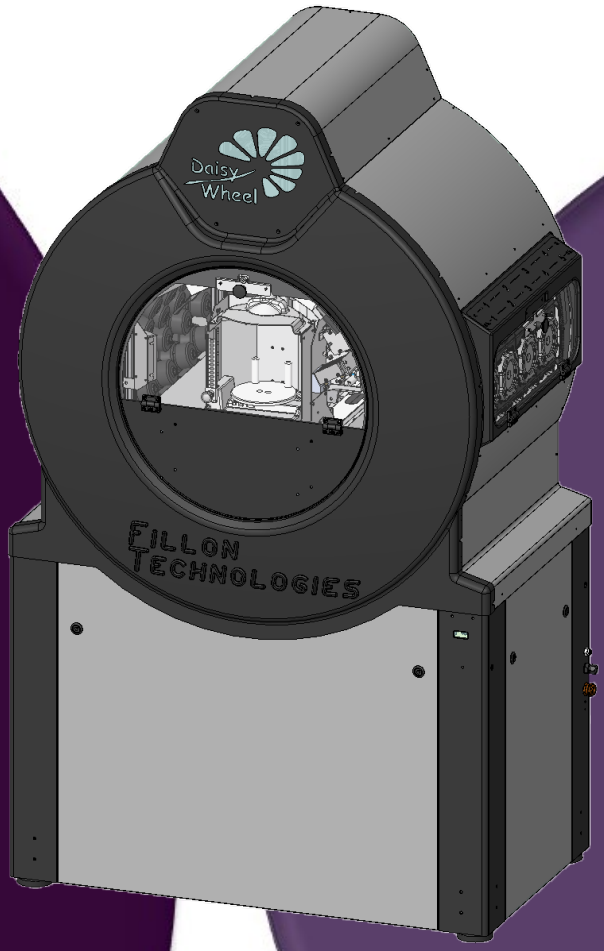

E19922B

USER MANUAL

GB – 10/2024

Fillon Technologies has conceived, designed and manufactured a colour preparation machine which is unequalled in the automotive market.

Precise and automated dosing

The Fillon Technologies Group has developed special technologies which make Daisy Wheel truly unique:

- Automated dosing using a valve, a solenoid, a scale and a dedicated software to link all these components in real time,
- Guaranteed precision of +/- 0.05g,
- Repetition of dosing,
- Automation of bodywork paint colour preparation.

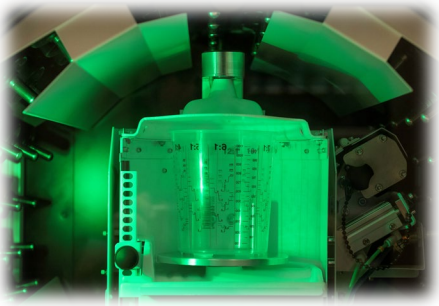

Paint preservation

To overcome the problem of preserving paint, Fillon Technologies has developed an air-free bottle which prevents premature evaporation of paint components. Finally, thanks to the soft mixing continuous rotation, Daisy Wheel prevents sedimentation of the paint.

Gloves and safety glasses must be worn when handling the machine.

TABLE OF CONTENTS

4 General presentation
5-6 Preliminary requirements
7 Installation
8-21 Use

8-9 Web interface access
10-14 Formula pouring process
15-20 Bottle replacement
21 Cleaning product filling

22 Paint Stock
23 User manual
24 Contact the After Sales
25 Tools Function
26 Update

27-31 Maintenance advice

27 Cleaning the dome
28 Cleaning the scale pan and scale use information
30 Cleaning the doors and cleaning the guide rails
31 Cleaning the spill tray

32 Valves maintenance

33-35 Error codes

36-37 Safety instructions

38-39 Malfunctions and Solutions

40 Marking & Use specifications

41 UE Declaration of Conformity

GENERAL PRESENTATION

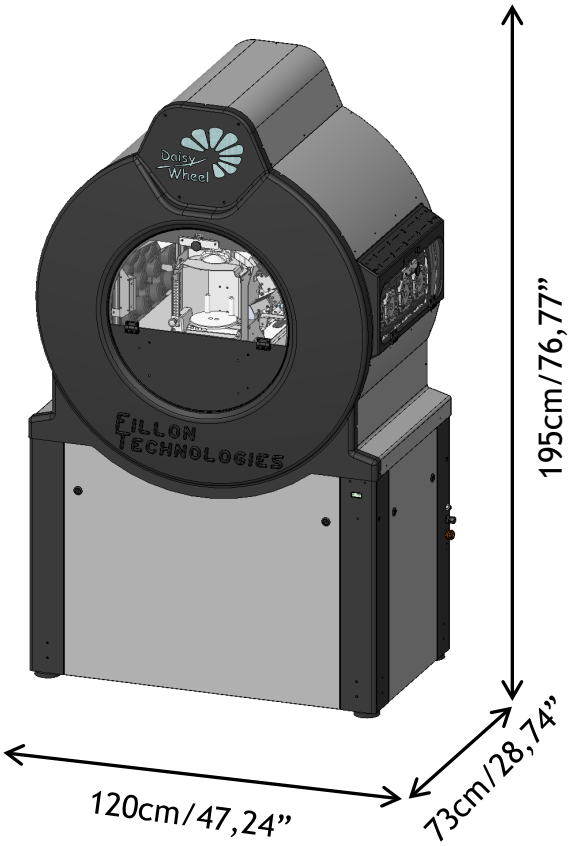

Daisy Wheel

Net weight without bottles: 211kgs

0,5L 1L

Bottles & valve (same for both types of bottle)

Cleaning products

Daisy Wheel Accessories (non integrated in the equipment):

Router

Clamping station + Torque wrench

PRELIMINARY REQUIREMENTS

✓ **Equipement required for installation of the Daisy Wheel and which is not supplied**

- A second Daisy Wheel support table which can hold the clamping station.
- A compressed air adaptor for a 6mm diameter tube for connection to the compressed air networ.
- An RJ45 6/FTP category straight internet connection cable to link Daisy Wheel computer to the installation.

✓ **Required connections to be provided by the user for installation of the Daisy Wheel :**

- Air connection:

▪ The machine must be connected to the compressed air network with a 6mm diameter compressed air hose. The air inflow should be dry, with no trace of moisture and regulated between 6 & 10 bars (87 & 116 Psi). The network must be equipped with a regulator filter and a water tank (this equipment is not supplied by Fillon Technologies or its approved supplier)
The network pressure must be between 6 & 8 bars (87 & 116 Psi).

- Electrical connexion:

• Ensure that the characteristics of the power supply provided for the machine match those on the identification plate. This equipment is designed to operation using a power supply (primary side) : U = 100-240V / 50-60HZ – I = 4A. The secondary of the Meanwell block delivers 24V which will power the machine.

The entry is under 24V ⎓ 8A,

▪ It is highly recommended to check that checks are carried out to ensure that the electrical installation is in compliance with National Electrical Codes and with local regulations.
▪ The equipment must be installed with an electrical protection system which complies with regulations.
▪ A 30mA rated differential circuit-breaker must be provided in order to provide protection for individuals and of the equipment.
▪ Ensure that the room you are using has an earth point which is used solely by your Daisy Wheel.

Daisy Wheel grounding. This operation must be realized by a certified technician other than Fillon Technologies

✓ **Ambient temperature to use Daisy Wheel:**

- 5° C/41° F < Temperature < 35° C/95° F

WARNING: Once the Daisy Wheel is installed, the machine must not been moved.

IMPERATIVE:
The Daisy Wheel must be installed on a flat surface.
The Daisy Wheel must be installed next to any item of equipment which may cause vibration.
The Daisy Wheel must remain connected 24 hours a day.
All tints stored outside the DW but which are reserved for filling the machine have to be stored at the optimum temperature of use in the DW (please refer to Paint Manufacturer recommendations)

PRELIMINARY REQUIREMENTS

- IT Connection :

Correct operation of the Daisy Wheel, software updates, remote fault diagnosis and rectification all depend on the installation conditions defined below:

- The Daisy Wheel must be connected to the router that is supplied with it.
- The PC (not supplied) used to control the Daisy Wheel must be connected to the router (Required configuration : Windows 10 or higher versions).
- A RJ45 6/FTP category straight internet connection cable (not supplied) must be connected to the router.
- A GPS antenna must be installed

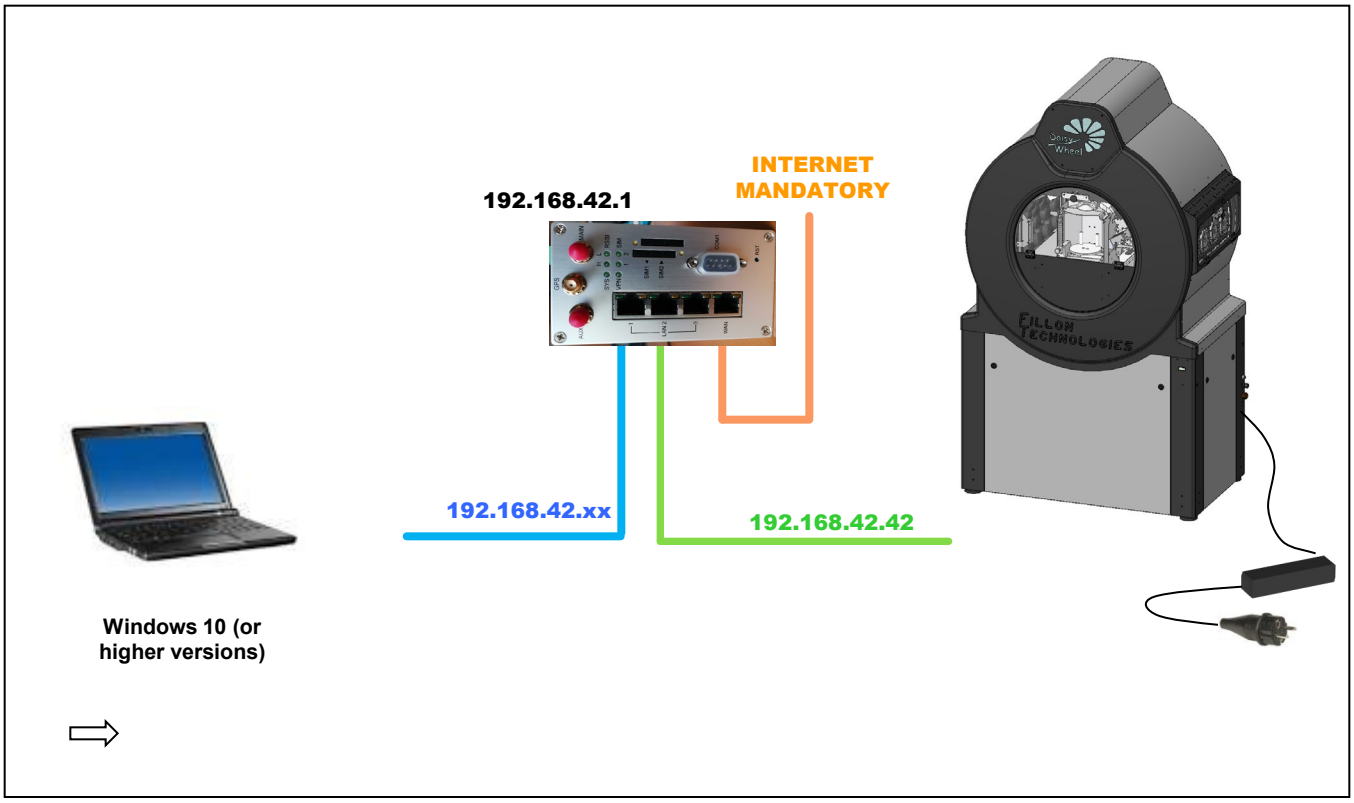

Irrespective of the configuration of the establishments, ports 22, 80, 123, 514, 2020 must be open for this network sub-assembly.

The following software are to be installed on the control PC :
Phobos (Remote Assistance - FR / EN / DE), Firefox.

INSTALLATION

✓ Transport and handling:

The equipment is delivered in a dedicated wooden crate to insure its safety during transportation and storage before installation.

✓ Installation :

Daisy Wheel can only be installed by Fillon Technologies Technicians or Fillon Technologies approved Technicians, who are only people qualified and authorized for the installation and commissioning of the equipment.

Once installed, the machine should only be used when carried on its feet (under no circumstances on its casters which should only be used for installation).

USE

✓ Soft Mixing Mode:

When your machine is not in use, it automatically enters in soft mixing* mode after 1 hour in order to preserve your paint.
This mode is signaled by a blue led light in the machine.

✓Access to the DWWI control interface (Web Interface) :

To access the Web Interface, open Firefox and enter the machine's IP address in the navigation bar or by the domain name (https://panel.daisywheel.fr).

When you arrive on the home page of the Web interface, enter your username and password (communicated during installation):

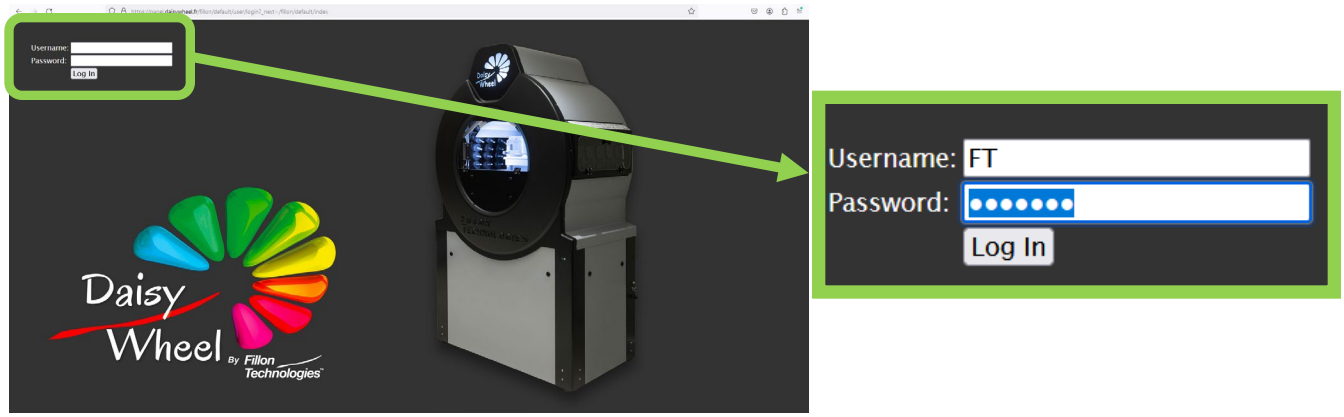

Nota: 1 User = 1 Username and each user will have to log out to allow the following user to log in.

**soft mixing: term used to describe the continuous rotation of the wheel*

✓ Daisy Wheel Interface :

✓ Once connected, you will be taken to the Daisy Wheel interface from which you can access to the following menus :

✓ To launch the formula, click on the "Pouring" button

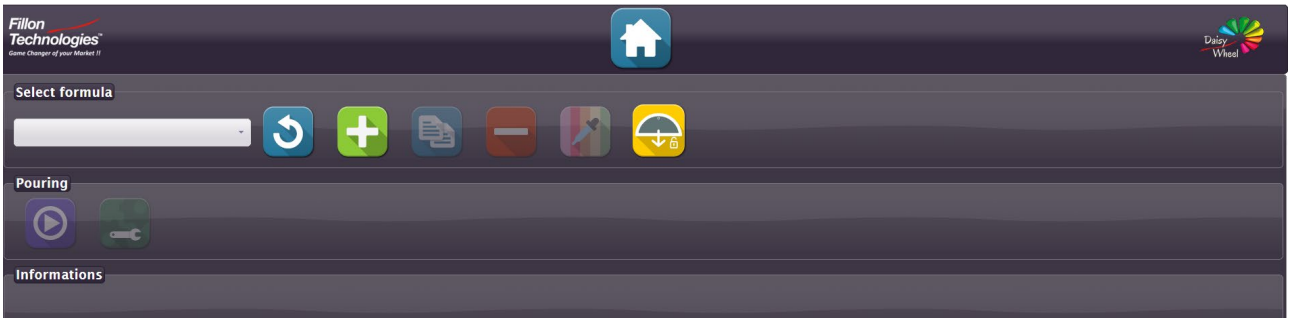

Gloves and safety glasses must be worn when handling the machine.

✓ Formula pouring process:

1. To retrieve the formula from the colour software, press the "refresh" button

2. In the "Pouring" tab of the Fillon Technologies interface, select the formula to be performed. Then click on the button to launch the formula (if required, enter the desired quantity):

3. The cup is automatically detected. Until this one is not installed at its correct position, the "Start Formula Now" button is not available:

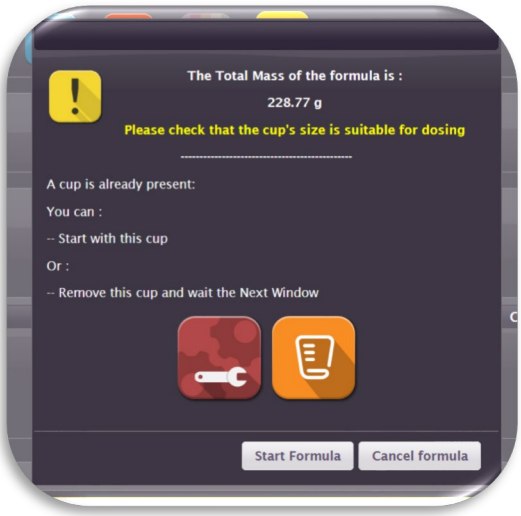

Gloves and safety glasses must be worn when handling the machine.

4. Open the front door and position the cup on the scale pan. Insure that the capacity suits to the quantity to be dosed.

The quantity to be dosed (in g) automatically appears allowing you to select the cup capacity.

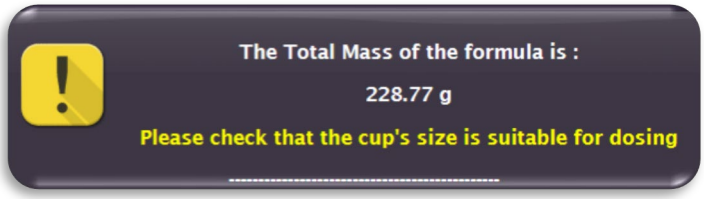

Then adjust the scale pan positioning thanks to the adjustable platform:

The top of the cup should be located the most close to the dome (~1cm)

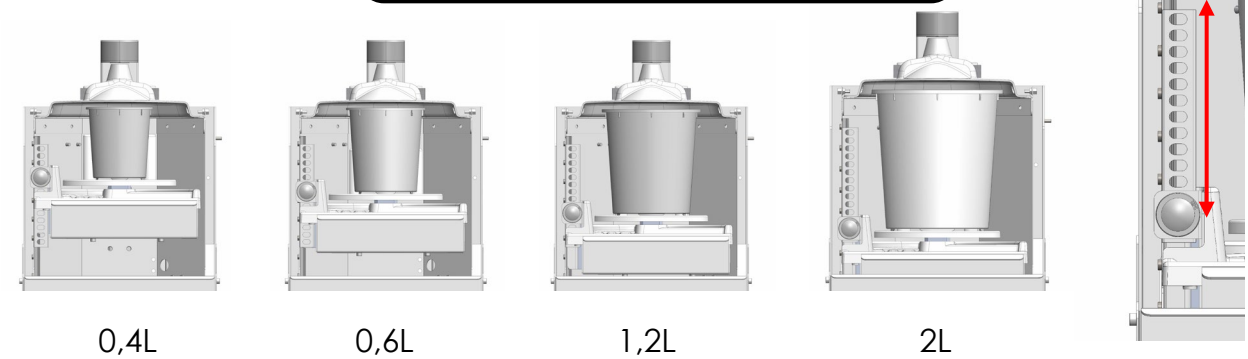

0,4L 0,6L 1,2L 2L

5. Once the cup correctly positioned, it is detected by the machine. Then click on the "Start Formula Now" button which is now available.

If the indicated mass does not correspond to your needs, cancel the formula.

Gloves and safety glasses must be worn when handling the machine.

6. If the quantity of paint is not sufficient, a window will appear asking you to replace the bottle(s). Click on «Reload selected » (refer to « Bottle replacement » from operation 4).

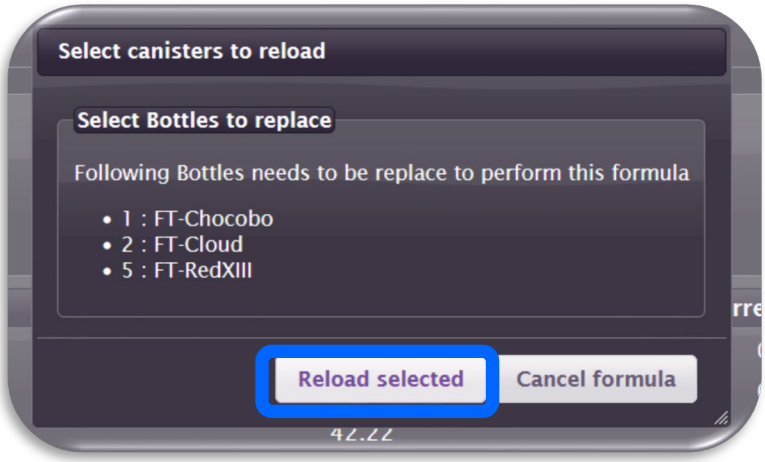

7. During the pouring, a window appears indicating that the formula is under process and the door must **<u>not be open</u>**.

Gloves and safety glasses must be worn when handling the machine.

8. The formula can be paused at anytime if necessary. Click on "Start Formula Now" to start the pouring:

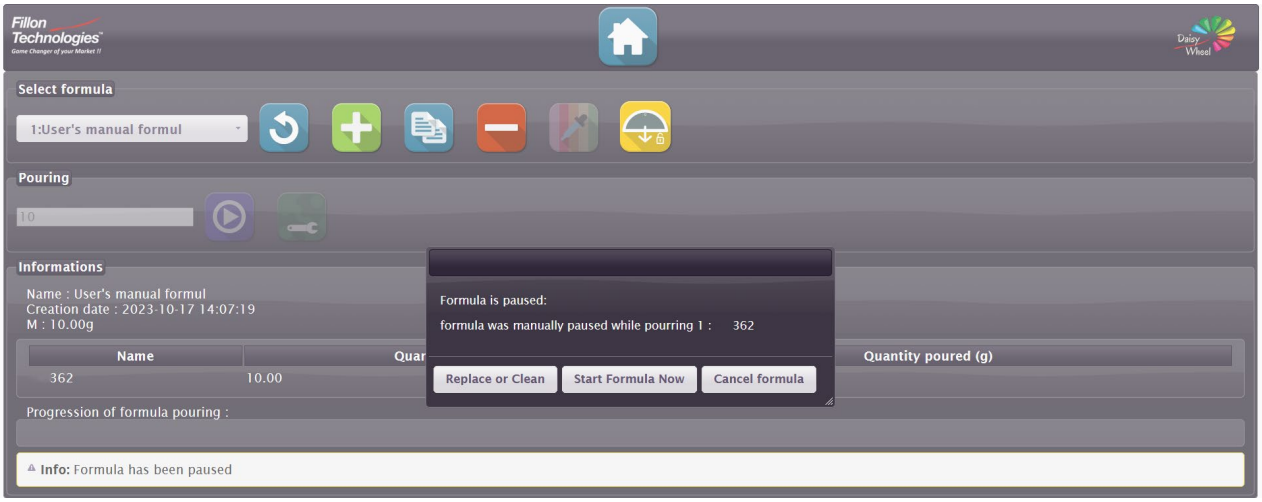

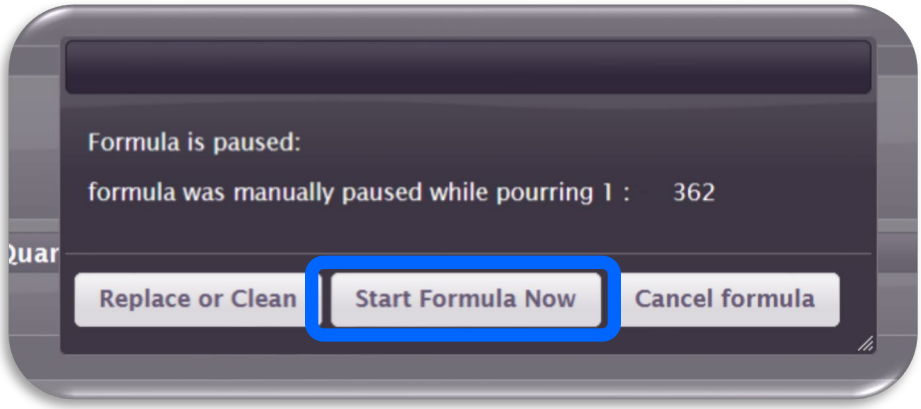

Gloves and safety glasses must be worn when handling the machine.

9. When the pouring is completed, two possibilities:

- **Color Job is correctly completed:**

a green button appears. According to the Color Software, the window can automatically disappear.
According to the Color Software used, the formula just completed can be automatically deleted.

- **Color Job is not correctly completed:**

a red button appears. In this case, when clicking on ok, a banner at the bottom of the screen indicates the type of error. Contact your DW support and clearly indicate the error code displayed.

Warning : Remember to close the door to return to the soft mixing mode (good paint preservation)

Gloves and safety glasses must be worn when handling the machine.

✓ Empty bottle replacement :

1. Open the tab "Change" .

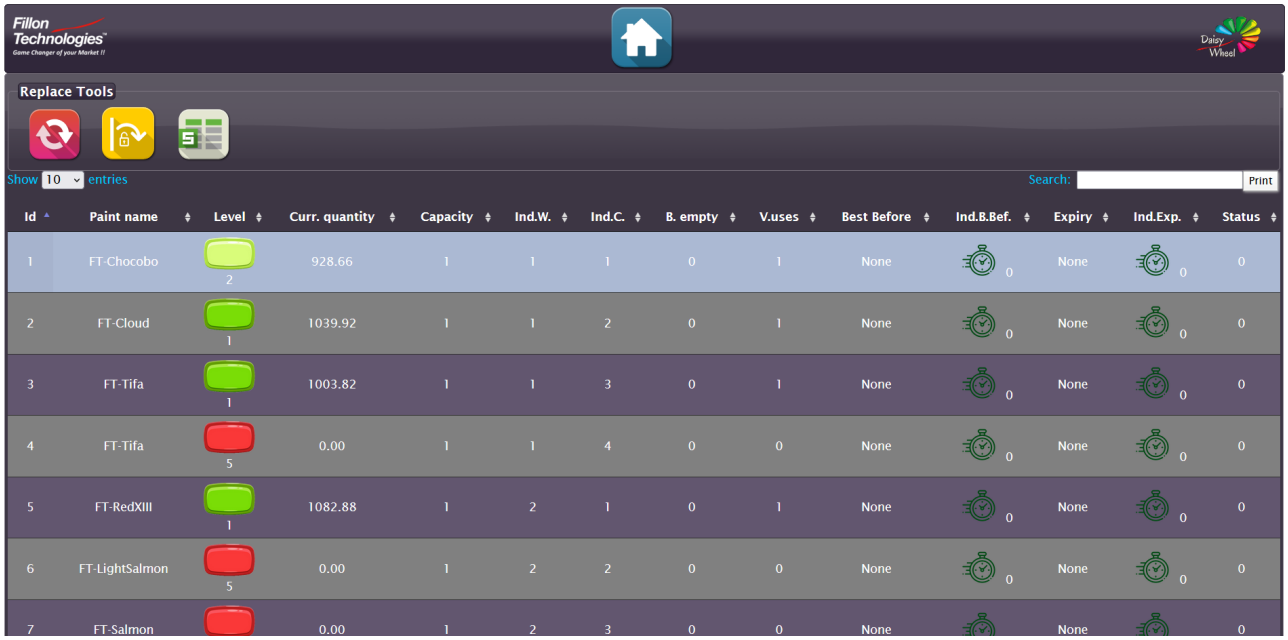

Id	Paint name	Level	Curr. quantity	Capacity	Ind.W.	Ind.C.	B. empty	V.uses	Best Before	Ind.B.Bef.	Expiry	Ind.Exp.	Status
1	FT-Chocobo	2	928.66	1	1	1	0	1	None	0	None	0	0
2	FT-Cloud	1	1039.92	1	1	2	0	1	None	0	None	0	0
3	FT-Tifa	1	1003.82	1	1	3	0	1	None	0	None	0	0
4	FT-Tifa	5	0.00	1	1	4	0	0	None	0	None	0	0
5	FT-RedXIII	1	1082.88	1	2	1	0	1	None	0	None	0	0
6	FT-LightSalmon	5	0.00	1	2	2	0	0	None	0	None	0	0
7	FT-Salmon		0.00	1	2	3	0	0	None		None		0

"Eject" button.

"Open Lateral Door" button.

"Generate Report File" button.

Gloves and safety glasses must be worn when handling the machine.

2. In the "Change" tab, select the tint to be ejected in the sheet. You can also indicate the tint reference in "Search":

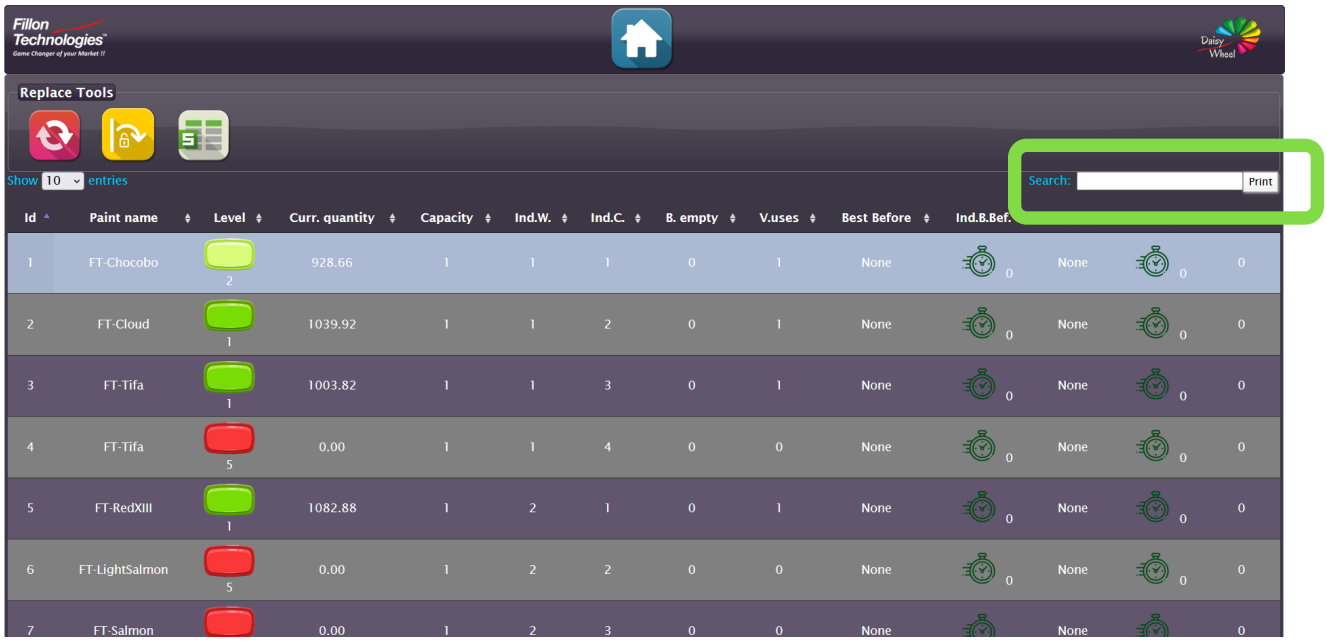

3. Click on the "Eject" button and wait for the bottle ejection:

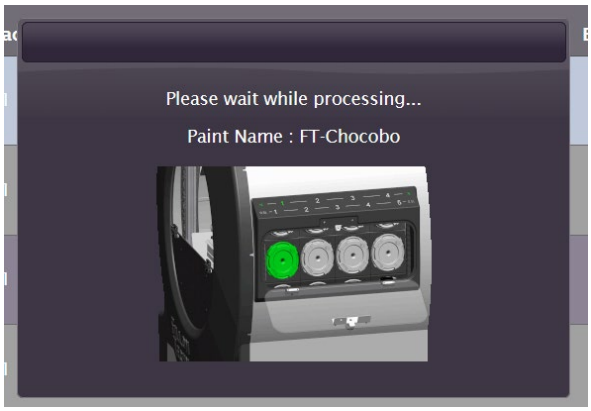

4. Open the lateral door and take off the bottle to be replaced as follows:

4a/ Unscrew the cell plug from its dedicated position as indicated on the screen:

4b/ Remove the bottle from its position.

Gloves and safety glasses must be worn when handling the machine.

5. Position the empty bottle on the clamping station:

5a/ Two possibilities:

- The empty bottle valve can be reused. In this case, unscrew it from the bottle thanks to the torque wrench and position it on the clamping station at the dedicated place (as shown below).
- The empty bottle valve reached its maximum use numbers, throw it away in the trash can dedicated to this purpose and position the ne valve on the clamping station at the dedicated place (as shown below).

5b/ Shake the new bottle before installation in the machine, according to the Paint Manufacturer recommendations.

5c/ Position a new bottle on the clamping station by using the gauge corresponding to its capacity (0,5L or 1L):

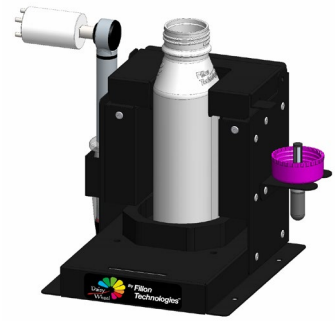

0,5L bottle positioning

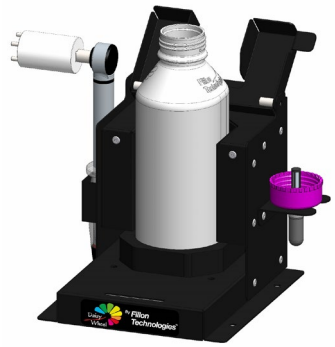

1L bottle positioning

5d/ Remove the current valve and throw it in the trash can dedicated to this kind of waste.

5e/ Screw the valve on the new bottle by using the torque wrench dedicated to this purpose (valve to be reused or new valve).

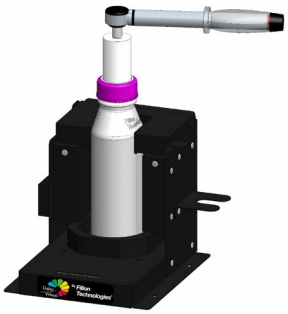

Gloves and safety glasses must be worn when handling the machine.

5f/ The bottle and the valve are managed according to their use numbers:

- 1 use for the bottle
- 7 uses for the valve
- Each of them must be scanned in order to be correctly positioned in the machine and record the bottle and valve replacement in the database
- It does matter if the bottle or the valve is scanned first

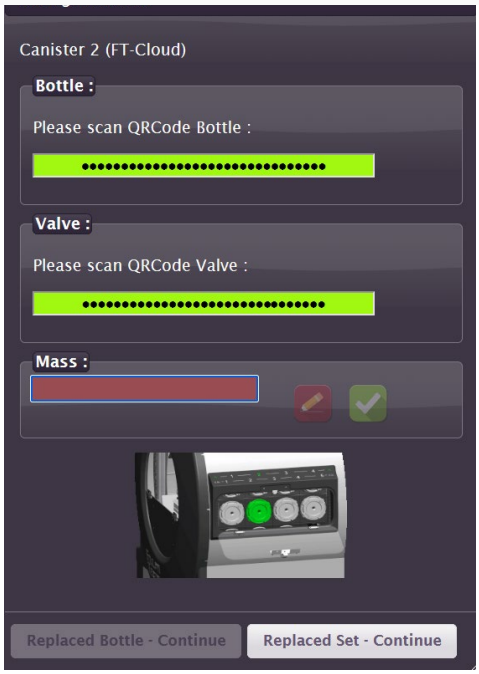

Gloves and safety glasses must be worn when handling the machine.

6. Indicate the bottle weight (in gramms):

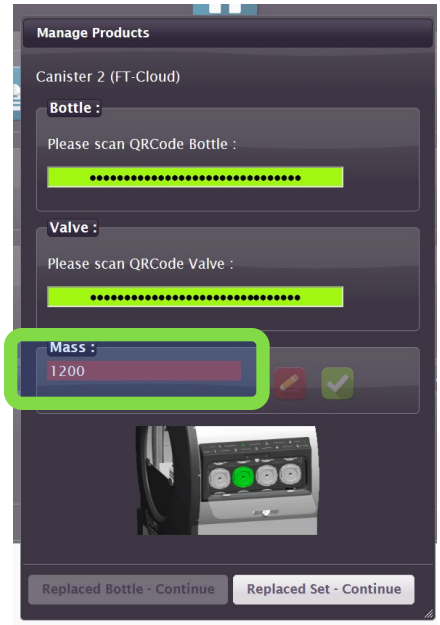

A window will appear indicating that you must replace the bottle

Gloves and safety glasses must be worn when handling the machine.

7. Put the bottle back into the machine at the precise location indicated on the screen:

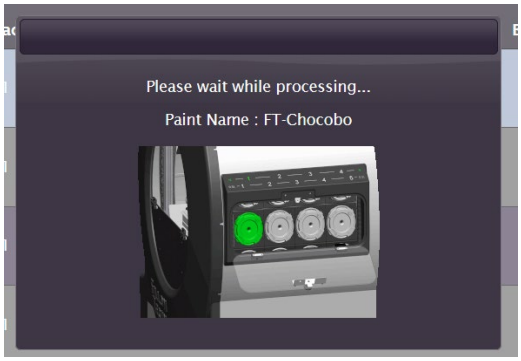

Close the cell plug.
Check that the 4 pins are properly closed.

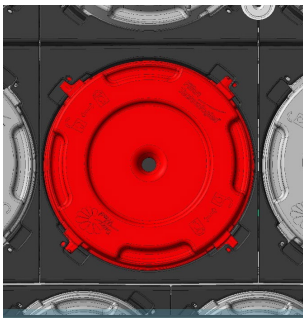

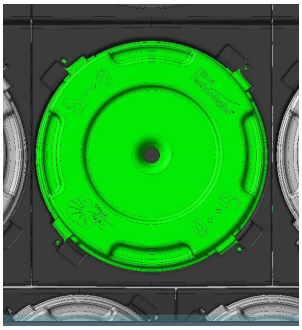

8. Check that the doors are correctly closed and click on "Replaced set – Continue".

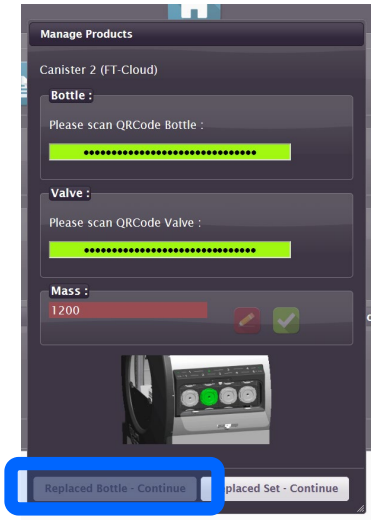

In case of re-use of the valve, click on "Bottle Replacing" .
The interface will automatically highlight the order to validate.

Gloves and safety glasses must be worn when handling the machine.

✓ Refill the cleaning product :

A window will appear when the cleaning product must be refilled:

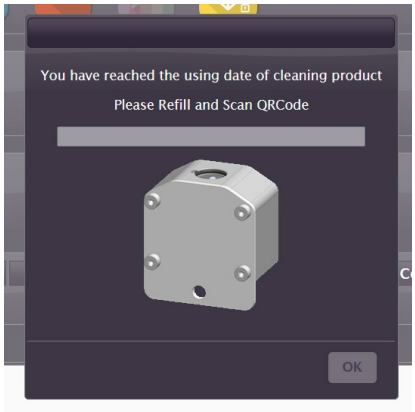

Remove the cassette by using the dedicated knob, empty the cleaning product residues, refill with the Fillon Technologies cleaning product bottle:

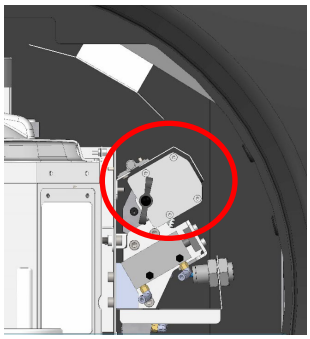

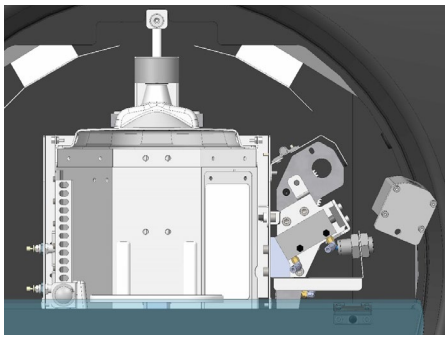

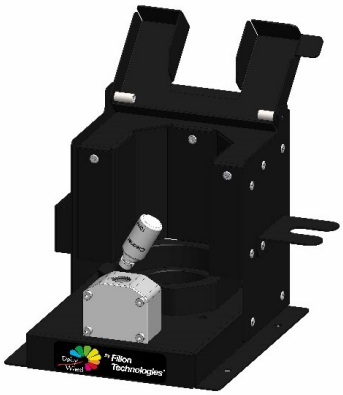

Scan the QR code present on the bottle to validate the refilling and reposition by screwing the cassette. Then, click on “OK”.

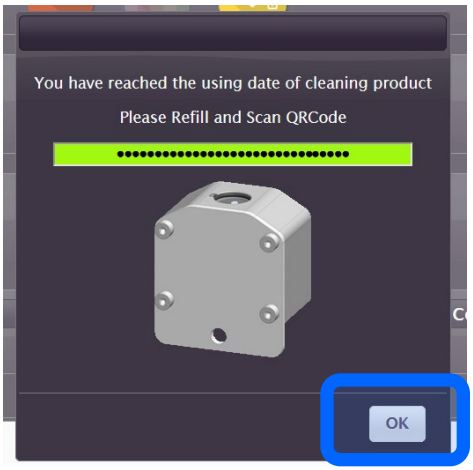

PAINT STOCK

At any time, you can check the paint stock to proceed to the tints replacement by clicking on the "Stock DW" button .

Show 10 entries Search: Print

Paint name	Id	Wheel index	Cart index	Capacity	Level	Curr. quantity	B. Life	Fill B. Date	V. Life	Fill V. Date	Best Before	Ind.B.Bef.	Expiry	Ind.Exp.
FT-Chocobo	1	1	1	1	2	928.66	1	2024-01-16 10:56:50	1	2024-01-16 10:56:50	None	0	None	0
FT-Cloud	2	1	2	1	1	1039.92	1	2024-01-16 10:59:17	1	2024-01-16 10:59:17	None	0	None	0
FT-Tifa	3	1	3	1	1	1003.82	1	2024-01-16 11:05:56	1	2024-01-16 11:05:56	None	0	None	0
FT-Tifa	4	1	4	1	5	0.00	0	None	0	None	None	0	None	0
FT-RedXIII	5	2	1	1	1	1082.88	1	2024-01-16 11:00:05	1	2024-01-16 11:00:05	None	0	None	0
FT-LightSalmon	6	2	2	1	5	0.00	0	None	0	None	None	0	None	0

✓ To replace the tints whose stock is running out:

Follow the steps indicated in "Empty bottle replacement" (from pages 15 to 20).

At any time, you can access to the user's manual by clicking .

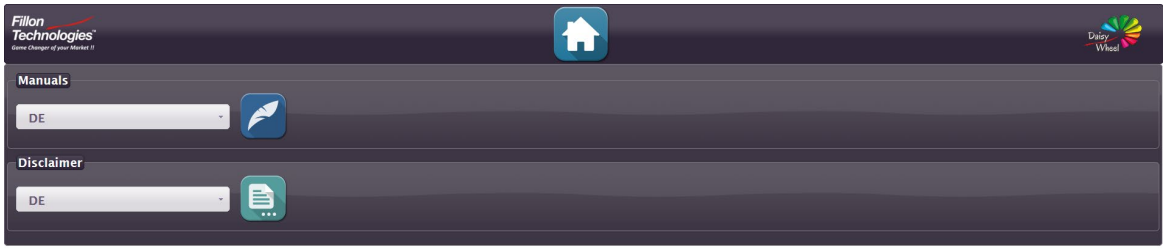

CONTACT THE AFTER SALES

At any time, you can contact the After Sales by clicking on “Hotline” button .

✓ an e-mail will be sent directly to the Daisy Wheel hotline:

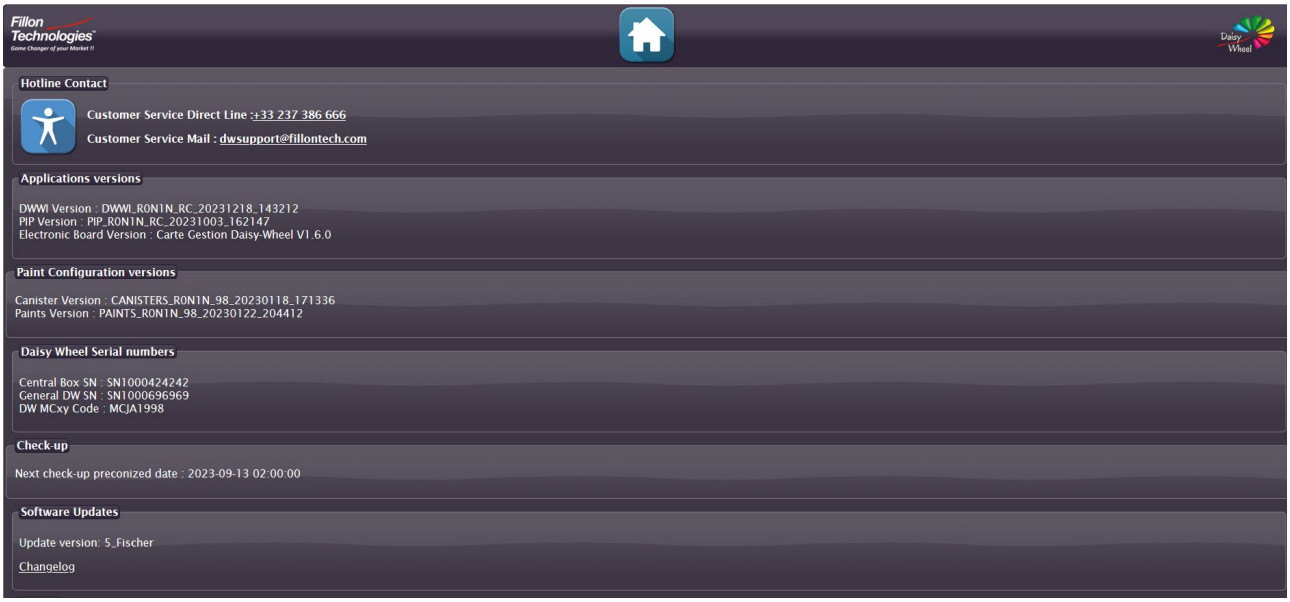

Daisy Wheel Service Hotline

Lundi au Vendredi 7h00 - 19h00
Monday to Friday 7:00 AM - 07:00 PM
Montag bis Freitag von 7:00 Uhr bis 19:00 Uhr

+ 33 2 37 38 66 66 dwsupport@fillontech.com

TOOLS FUNCTIONS

Characteristics (machine and captors state)are available by clicking on tools button .

“Restart PIP” button.

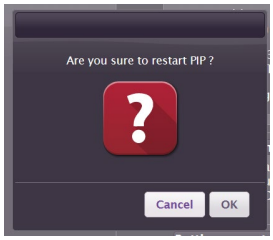

Delete all current formulas in the formula list.

Cart management: movement of the cart by the user.

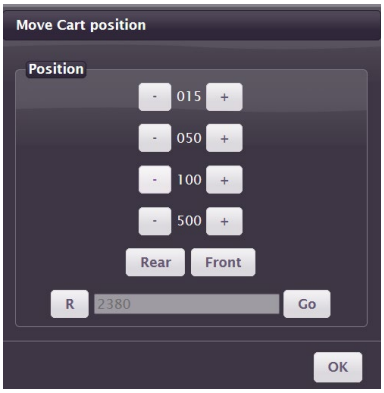

UP DATE

Check for availability of new updates by clicking on update button .

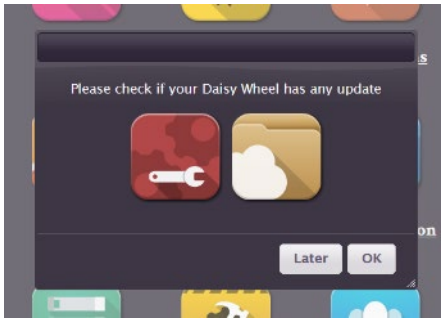

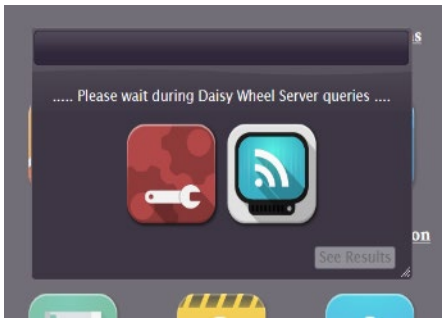

Click on "See Results" to launch the update. If updates are available, click on "OK".

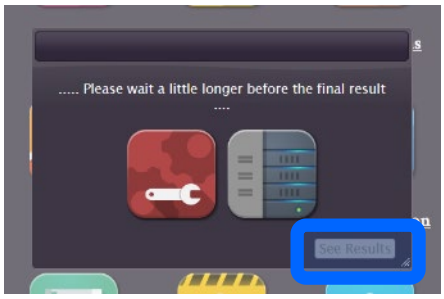

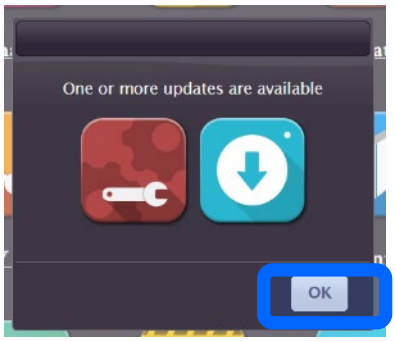

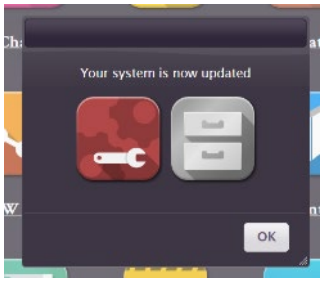

At the end of update, it's necessary to close and restart Firefox.

MAINTENANCE ADVICE

Gloves and safety glasses must be worn when handling the machine.

Regular maintenance must be carried out to ensure that the Daisy Wheel operates correctly.

Windows will be displayed to ask you to carry out the weekly or monthly maintenance:

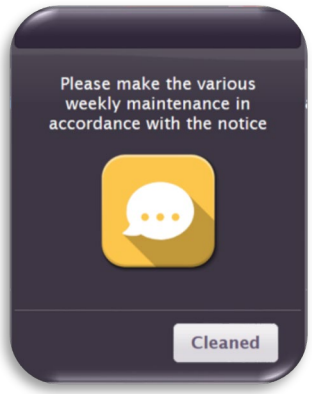

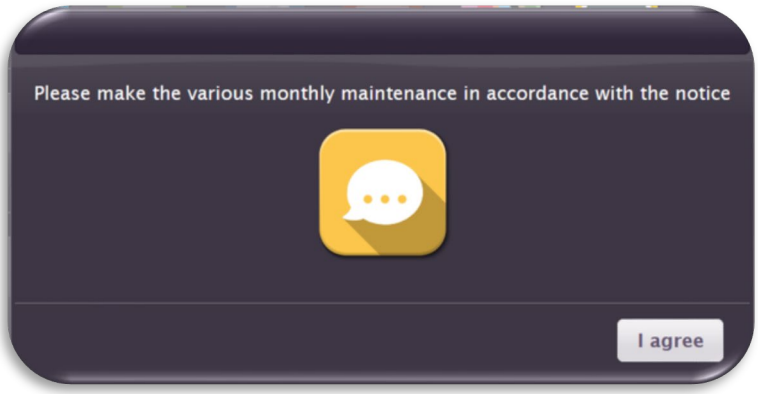

MAINTENANCE ADVICE	
WEEKLY	
Cleaning the dome	p28
Cleaning the scale pan	p25
MONTHLY	
Cleaning the doors	p26
Cleaning the guide rails	p26
Cleaning the spill tray	p27

WEEKLY:

✓Cleaning the dome: 5 min

Check if the dome is clean and if not, clean it using a cloth lightly moistened with Fillon Technologies cleaning product or with a Fillon Technologies cleaner wipe.

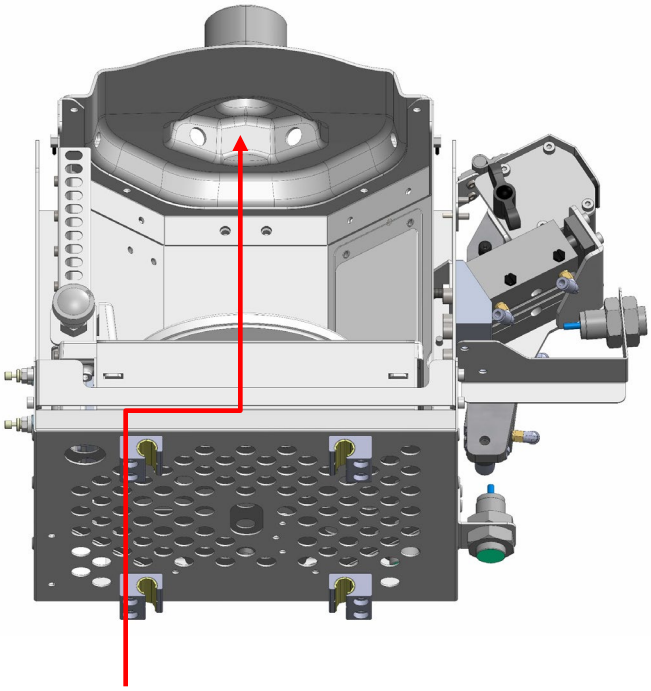

Ensure to insist in the hollow of the dome to remove all paint traces,

WEEKLY:

✓Cleaning the scale pan: 1 min

Check if the scale pan is cleaned and if not, clean it using a cloth lightly moistened with Fillon Technologies cleaning product or with a Fillon Technologies cleaner wipe.

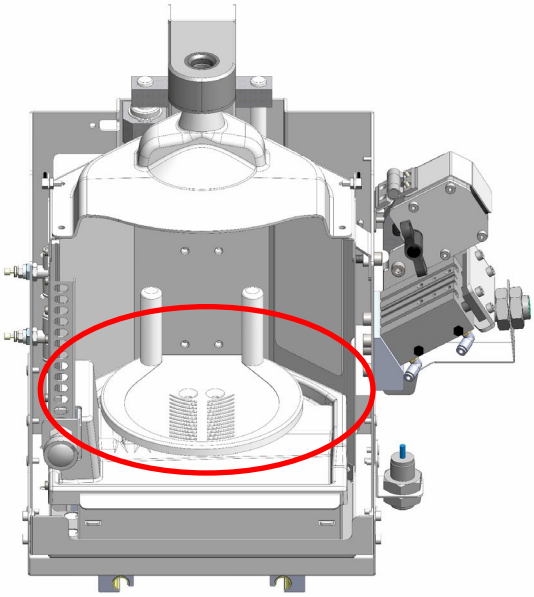

✓ Warning! Information use and maintenance of the scale platform

Please note that the scale platform of your Daisy Wheel equipment cannot support a load above 5kg. Above this load, we cannot guarantee anymore the running of this part, and consequently of your equipment. Moreover, any damages resulting from an overload above 5kg on the scale platform will not be covered under warranty. So please apply the following operating conditions:

Do not deposit loads above 5kg on the scale platform
During cleaning operations, do not apply any pressure to the scale platform but touch gently without any pushing action, with the suitable H2O Fillon Technologies cleaning product.
During maintenance operations, please follow the instructions you have been trained for by our After Sales Teams.

MONTHLY :

✓Cleaning of the doors: 1 min

Check if there are paint splashes and if so, clean using a cloth lightly moistened with the Fillon Technologies cleaning product or a Fillon Technologies cleaner wipe.

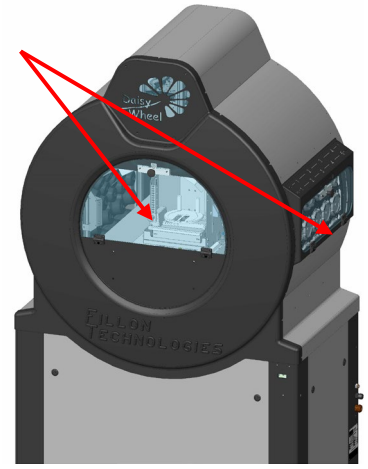

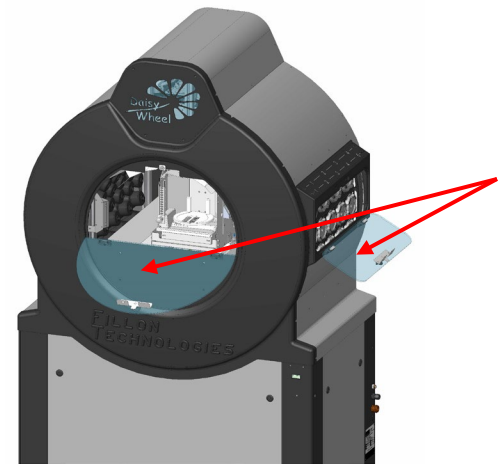

✓ Cleaning the guide rails: 5 min

1. Check if the rails are clean.
2. Move the central dispensing unit to the rear to gain access to the rails by using the button in the maintenance tab.
3. Clean using Fillon Technologies cleaning product.

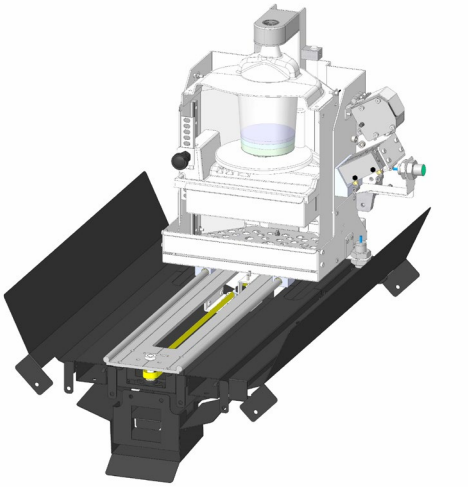

MAINTENANCE ADVICE

MONTHLY :

✓Cleaning the spill tray: 10 min

1. Check if the spill tray is clean and if not, proceed to the following steps.
2. Remove the scale pan using a 4mm Allen key.
3. Clean the spill tray using a clothe lightly moistened with Fillon Technologies cleaning product.
4. Put the spill tray back using a 4mm Allen key.
5. Check correctly that the spill tray is not touching the weighing cell.

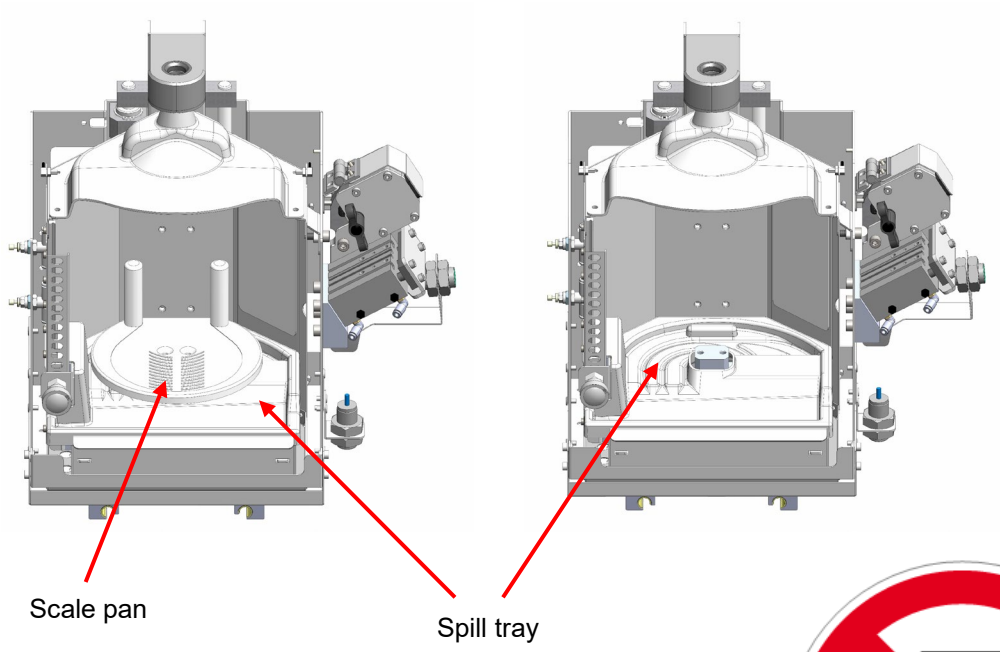

VALVES MAINTENANCE

✓ A window appears informing you that the valves maintenance will have to be done :

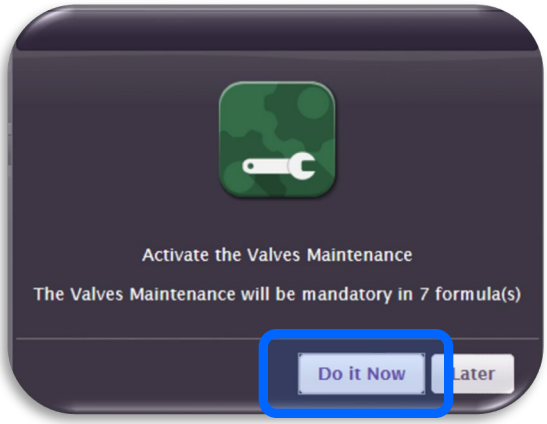

✓Nota : this maintenance is mandatory and will have to be carried out or the machine will be blocked.

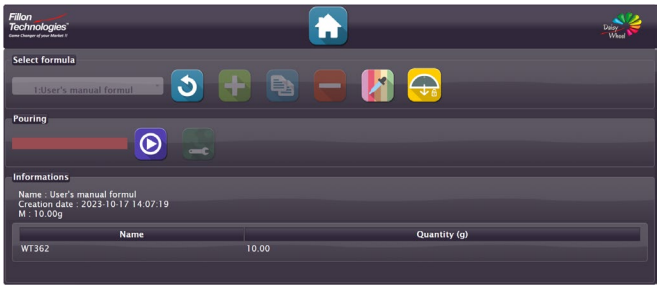

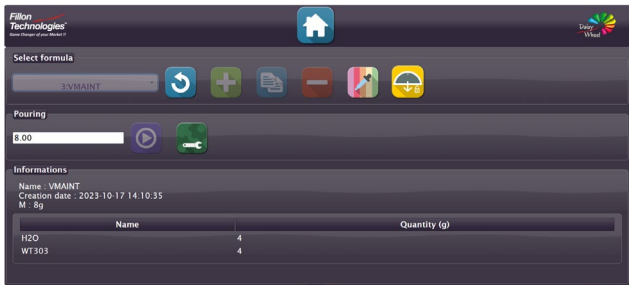

ERROR CODES

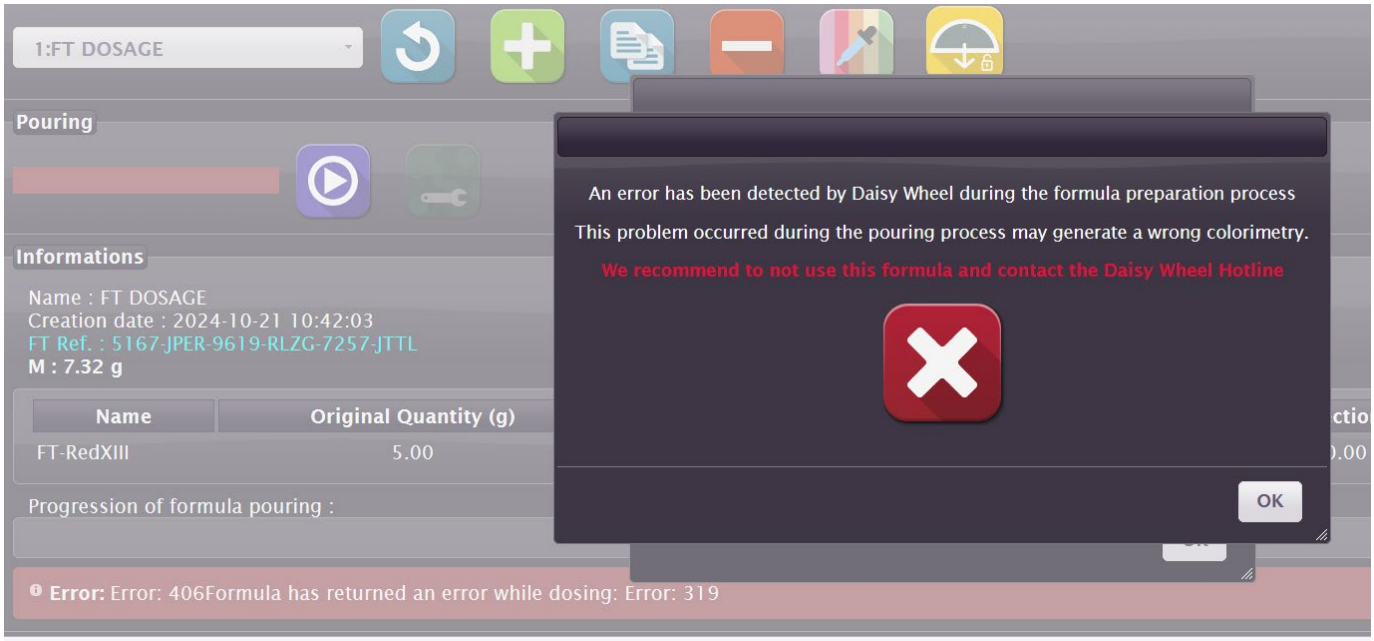

Error 40x:
System status code.
See details in the table.

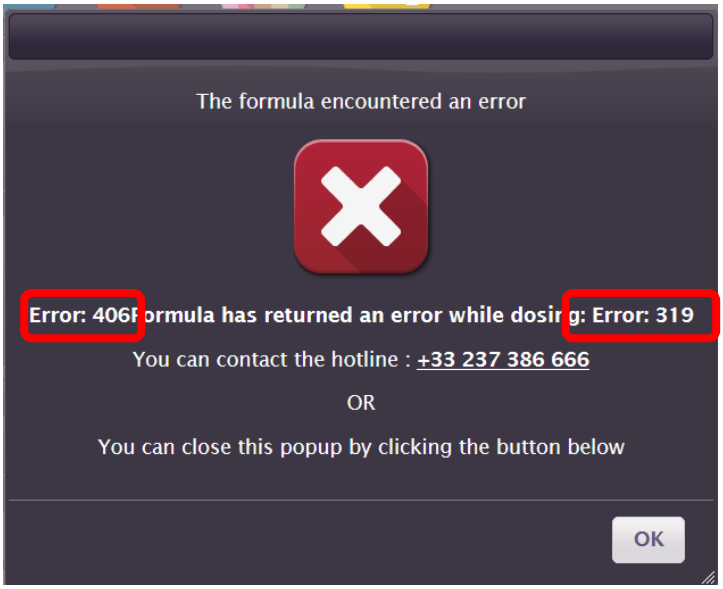

Error 3xx:
Error code.
See details in the table.

System Status Codes:

Code	Description	
405	Error Status	The details of the error are displayed on the Daisy-Wheel interface. Please refer to the list below for more details.
406	Pause status	

ERROR CODES

Error code list:

Code	Description	Solutions
301	Electronic communication problem	1) Restart the PIP 2) If the problem persists: please contact the Hotline
302	Balance communication problem	1) Restart the PIP 2) If the problem persists: please contact the Hotline
303	Clogged valve	Follow the on-screen directions
304	Action Problem / Action Time	1) Restart the PIP 2) If the problem persists: please contact the Hotline
305	Open doors	Follow the on-screen directions
306	Overdose error	Follow the on-screen directions
309	Lack of cleaning product	Follow the on-screen directions
310	Incorrect position	1) Restart the PIP 2) If the problem persists: please contact the Hotline
311	Unsafe action	1) Restart the PIP 2) If the problem persists: please contact the Hotline
312	Pressure fault	Follow the on-screen instructions, the validation button is released once the correct pressure is applied
313	Default scale tare	1) Check the stability of the Daisy-Wheel 2) Check that the bucket does not touch the dome 3) Check the Balance for Cleanliness 4) If the problem persists: please contact the Hotline
315	Fault closing valve	1) Follow the on-screen directions 2) Change the valve and do not use the paint from the pot 3) Restart the dosage
319	Fatal over dosing	Follow the on-screen directions

ERROR CODES

Error of staut glogal:

Code	Description	Solutions
1_DWGS	Problem of inititalization	Contact the Hotline
2_DWGS	Problème de Syscom	Follow the on-screen directions
3_DWGS	Defects in the doors	Follow the on-screen directions
4_DWGS	Scale default	1) Restart the PIP 2) If the problem persists: please contact the Hotline

If the error number is greater than 4, please contact the Hotline.

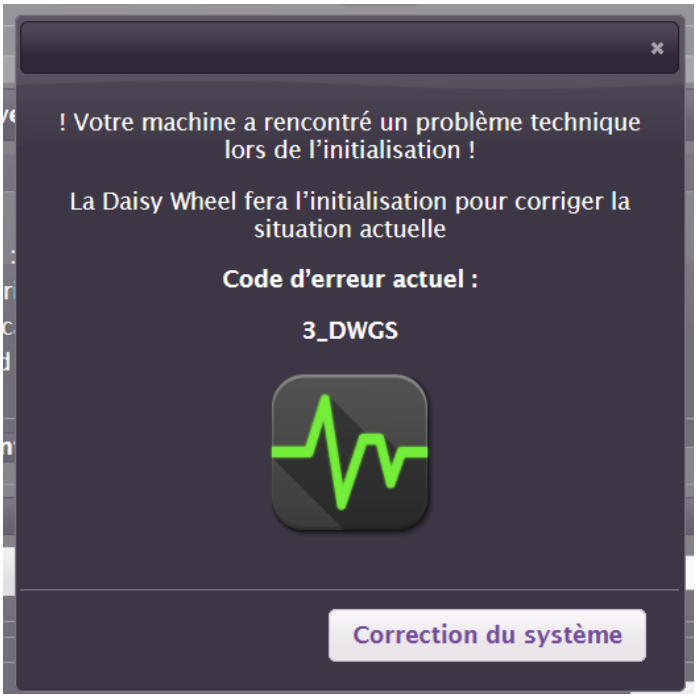

SAFETY INSTRUCTIONS

- **Field of use**

You have just acquired a DAISY WHEEL model mixer-doser machine manufactured by FILLON TECHNOLOGIES.
This equipment is designed for use by bodywork professionals and equivalent trades.

- **Marking**

European community: please refer to the EC compliance declaration and the manufacturer's identification plate on the machine
Other countries: please refer to the manufacturer's identification plate on the machine.

The manufacturer declines all liability in the event of failure to comply with the instructions below and/or if the machine specifications are modified and/or if the machine is used for a purpose other than described in this manual.

SAFETY INSTRUCTIONS AND RISK ANALYSIS:
GENERAL SAFETY AND EQUIPMENT MANAGEMENT INSTRUCTIONS

Before commissioning:

DANGER:

▫ Install the machine in a ventilated room which is protected from vibrations and bad weather. The ambient temperature range of use of the machine must be included between +5°C/41°F and +35°C/95)F. This temperature range may be modified by the storage and use temperatures of paint products (refer to technical data sheet from Paint Manufacturers)

▫ Place the machine on a level and stable surface that can withstand a load of 250 Kg.

WARNING:

▫ For your own safety when installing wear gloves

PRECAUTIONS

▫ For ergonomic and functional reasons the machine should be installed on a work surface (or item of furniture) of an approximate height of 75 cm with a free access to the right side of the machine (approx. 50 cm).

Warning for explosive atmospheres: the machine must be installed in a zone corresponding to the marking on the manufacturer's identification plate. The Directive 99/92/EC covering the safety of workers exposed to the risks of explosive atmospheres is completely applicable in all European community countries. In other countries comply with applicable regulations.

Electric installation:

The machine's electric power supply must be grounded by connection of its power cable and connected to a 10A line and protected by a 30mA ground fault circuit breaker in order to protect persons and the machine.

All installation, inspection, repairs or adjustment of the electric components must only be carried out by a qualified electrician.

▫ Connect the machine to the mains using the supplied cable. The use of extension leads is prohibited

▫ The socket is placed at the end of the power supply cable to be connected to a wall mounted power outlet that must remain permanently accessible and at a height between 0.6 and 1.9 m from the floor. The wall power outlet is the cut-off point for the mains power supply.

▫ It is imperative that the circuit on which the machine is installed be fitted with a switch-cut-off system compliant with standards EN 60947-2 and EN 60947-3, fitted with a system to lock it in the "open" position.

On installation:

▫ The machine is delivered already mounted in packaging.

▫ The machine installer must have been trained by Fillon Technologies.

▫ During handling operations, authorised personnel must wear safety equipment (shoes, gloves).

▫ When removing the machine from its transport crate, the machine must go down the ramp on the "small" side of the crate, facing the slope of the ramp.

▫ The machine is only moved on its castors during the installation phase. This stage is carried out by authorised personnel.

▫ Once installed, the machine rests on its support feet.

▫ Under no circumstances should the user move or handle the machine.

On commissioning:

The DAISY WHEEL machine has an acoustic power below 70 dB(A).

WARNING:

▫ Before commissioning for use check that all flanges have been removed.

▫ Before commissioning for use check that no obstacles prevent the machine from operating.

▫ Connect the machine to the mains power supply.

▫ When the machine is connected to the power supply it should start in soft mixing mode (rhythmic rotation)

Follow the commissioning instruction supplied with the installation instructions.

SAFETY INSTRUCTIONS

On use:

- Always leave the machine powered on with the doors closed to guarantee correct operation.
- Before reusing a canister make sure it is in good condition.
- Only use canisters designed by Fillon Technologies.
- Only use approved waterborne base tints in the DAISY WHEEL machine.
- Comply with the safety instructions recommended by the paint manufacturer.
- During dosage operations comply with the user interface instructions.
- The machine is intended for use in a controlled environment.
- Check the integrity of the machine and its envelope every 4 weeks.

DANGER:

In the area the machine is installed in: Do not smoke - Do not use naked flames.

- Do not store anything else than the waterborne paint line in the equipment.
- Do not store anything on the equipment.
- Always put the protective guards back in place. They are designed to protect from damage or injury.

WARNING:

- Never use a damaged paint canister in the machine.
- The paint canisters must be placed correctly in the specified housings before starting up the machine.
- Clean the doors using a damp cotton cloth.
- For persons with long hair it is mandatory to wear hair protection.
- Do not wear loose-fitting clothes, they could be caught up in the machine.
- Use the personal protection equipment recommended by the paint manufacturer.

PRECAUTION:

- Do not allow dust or paint residue to accumulate on or in the machine.
- Attach long hair, Do not wear loose clothing.

On maintenance:

Servicing and maintenance instructions

All repairs must be made by a technician trained and qualified by Fillon Technologies.

Disconnect the equipment from the power supply before removing any guards and carrying out maintenance or repairs. To maintain the performances of your machine and reduce the risk of incidents occurring, the regular maintenance defined below is strongly recommended:

- Clean the doors using a damp (soapy water) cotton cloth and replace (if necessary)
- Clean the scale pan, the guiding rails and the dome using a cloth soaked in cleaning fluid (see maintenance advice)
- Clean the platforms, the spill tray and the cleaning nozzle using a cloth soaked in cleaning fluid (see maintenance advice)
- Clean the valves using a damp sponge and replace them (see maintenance advice)

After all maintenance operations, make sure that all safety devices that were removed have been put back into position.

Illustrations in the instructions show the spare part numbers.

- **Additional documentation :**

User manual

Certificate of training in the use of the machine

Maintenance procedures

Use and maintenance video

MALFUNCTIONS & SOLUTIONS

Preliminary Requirements	*a) Check that the machine is connected to the mains supply and that the voltage of the electricity supply is correct.* *b) Check that the front and side doors are fully closed (physically closed + status of the sensors in the web interface maintenance tab).* *c) Check that the dosing unit has not remained in the high position (status of the sensors in the web interface maintenance tab)* *d) Check that the cleaning module is in piston-retracted position (status of the sensors in the web interface maintenance tab)* *e) Connect/reconnect the electrical power supply to the machine and check that the blue supply warning light is on.* *f) Check the connection to the air network(6-8 bars/87-116 Psi).* *g) Check the network connection:* *Have you waited 1 minute before accessing the control interface (Web Interface)?* *Is there power to the router? (power green pictogram)* *Is the pictogram corresponding to the RJ45 connector of the DW flashing?* *o If not, check that the network (RJ45) cable of the DW is properly connected to the router and check its status* *o If everything is ok, then check the router is correctly configured (in this event contact your network administrator)*

MALFUNCTIONS	SOLUTIONS
1) The rhythmical rotation (soft mixing) of the wheel is not functioning	*Warning: the soft mixing mode is automatically initiated after 15 minutes of inactivity (initialisation of the machine, dosing, bottle ejection, etc…)* *1a) Check all preliminary requirements* *1b) If the problem persists, contact the Hotline (After Sales Service)*
2) The machine initialisation is not functioning	*2a) Check preliminary requirements* *2b) In the web interface, check that the initialisation is ok. If the problem persists, contact the Hotline with details of the error message that is displayed.*
3) The dosing process does not start No movement of the machine	*3a) Check preliminary requirements* *3b) Check that there is no mechanical obstruction present or abnormal noises (doors closed)* *3c) Check that the horizontal slides are clean* *3d) Check that the valve is well aligned with the dispensing unit. In the event of a problem, contact the Hotline*
No paint flow	*3e) Check that the dosing unit is actually in the high position (in contact with the wheel)*
4) The dosing unit has remained in the high position	*4a) Contact the Hotline*
5) The bottle to be replaced is not accessibke	*5a) Check the preliminary requirements* *5b) Check that there is no mechanical obstruction* *5c) Contact the Hotline*
6) The cell plug cannot be closed	*7a) Check that the bottle is well positioned inside* *7b) Check the condition of the cell plug* *7c) Check that the bottles & valves used are of Fillon Technologies design* *7d) If the problem persisst, contact the Hotline*

MALFUNCTIONS & SOLUTIONS

MALFUNCTIONS	*SOLUTIONS*
8) Dosing is not carried out correctly	*8a) Check that the valves are clean* *8b) Check that the cone is clean* *8c) Check that the cup is not in contact with the dosing enclosure* *8d) Check the temperature of the paint (e.g. paint taken from the stock)* *8e) Check that the cup is in the right position (platform settings)* *8f) Take off the plate/retention tray and check it is clean* *8g) Check that bottles and valves are of Fillon Technologies design* *8h) Check that the paint reference and position of the bottle match*
9) The valves are dirty	*9a) Check preliminary requirements* *9b) Use a cloth moistened with Fillon Technologies cleaning product* *9c) Purge and fill in the cleaning cassette with new Fillon Technologies cleaning product* *9d) Check the alignment of the valve with the cleaning system. In the event of problems, contact the Hotline* *9e) Check that the cleaning system is clean and replace it if necessary* *9f) If the problem persists, contact the Hotline*
10) Broken or worn component	*10a) Contact the Hotline (After Sales Service)*

Fillon Technologies™
AFTERSALES

2 Route de Houdan, CS 70009 Faverolles
28132 PIERRES Cedex
France
☎ **+33 (0)2 37 38 66 10**
✉ **dwsupport@fillontech.com**

MARKING AND USE SPECIFICATIONS

- **A recapitulation of the information with which the equipment is marked**

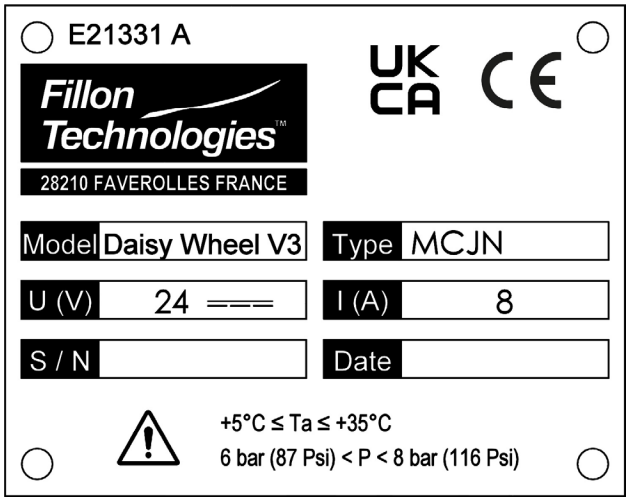

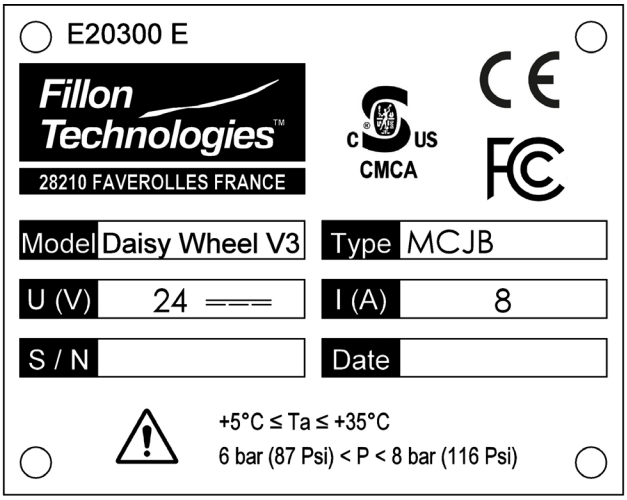

- **The Daisy Wheel machine is intended for indoor use.**
- **The equipment is not intended for use in potentially explosive atmosheres.**
- **If the equipment is used in a manner not specified by the manufacturer, the protection provided by the equipment may be impaired.**

- **Specification for the rating of the insulation of external circuits.**

The external power supply must provide a reinforced insulation between mains and secondary parts.

- **Specifications for the range of environmental conditions for which the equipment is designed:**
  - Specification of the Pollution Degree: “2”
  - Specification of the Overvoltage Category: II
  - Specification for the maximum use altitude: 2000 m above sea level.

- **Specification for ambient temperature rating**

  5 to 35°C / 41 to 95°F

- **Max. relative humidity : 80%**

UE / UK DECLARATION OF CONFORMITY

Déclaration UE / UK de Conformité

As the Manufacturer : FILLON TECHNOLOGIES – 2 ROUTE DE HOUDAN – 28210 FAVEROLLES - FRANCE
Hereby declares under its sole responsibility that the products

Description: Paint mixing machine,
Type: Daisy Wheel V3 (type MCJN, MCJB…)

Comply with the requirements of the following European Directives through the application of harmonized standards :
Comply with the following British legislation through the application of designated standards :

- Machinery Directive 2006/42/EC / S.I. 2008 No. 1597 Supply Of Machinery (Safety) Regulations

- Low Voltage Directive 2014/35/EU / UK SI 2016 No. 1101 Electrical Equipment (Safety) Regulations
  - IEC 61010-1:2010 + A1:2016 ; EN 61010-1:2010
    Safety rules for electrical measuring, control and laboratory devices
  - IEC 61010-2-051:2015 ; EN 61010-2-051:2015
    Particular requirements for laboratory equipment for mixing and stirring

- Electromagnetic Compatibility Directive 2014/30/EU / S.I. 2016 No. 1091 Electromagnetic Compatibility Regulations
  - IEC 61000-6-2:2016 ; EN IEC 61000-6-2:2019
    Generic standards - Immunity for industrial environments
  - IEC 61000-6-4:2006, AMD1:2010 ; EN 61000-6-4:2007, AMD1:2011
    Generic standards - Emission standard for industrial environments
  - IEC 61000-3-2:2014 ; EN 61000-3-2:2014
    Limits for harmonic current emissions
  - IEC 61000-3-3:2013 ; EN 61000-3-3:2013
    Limitation of voltage variations, voltage fluctuations and flicker

- RoHS Directive 2011/65/EU & 2017/2102/EU / S.I. 2012 NO. 3032 Restriction Of The Use Of Certain Hazardous Substances In Electrical And Electronic Equipment Regulations

July 28, 2022,
Chief Executive Officer,
Sébastien REINBOLD